SHOCKWAVE
VIDEO LIGHTING

ACTUAL SIZE

V-BRAIN 600 WET

SHOCKWAVE DIRECT VIEW | CONTROLS

The SACO Shockwave Direct View V-BRAIN 600 WET is an innovation in both power and data delivery. Designed to control Shockwave Direct View products, the modular outdoor system provides flexibility and reliability for outdoor rated projects.

Tethered power and data allows the Shockwave line of fixtures to take full advantage of the latest SACO solid state technology and efficient heat dissipation, shedding weight and bulk to leave only a slim, powerful fixture in a modular arrangement that easily integrates with any project. Applying the same concepts, the Shockwave Direct View V-BRAIN 600 WET is designed like the fixtures it powers; modular, stackable, slim and weatherproof.

DEEP COLOR	SACO s proprietary V-STREAM high-speed, high-resolution video pixel control. 16-bit data sampling for silky smooth dimming, with 65,536 shades per color.
BUILT TO LAST	Sturdy construction built for outdoor conditions.
REMOTE CONTROL	Tethered power and data allows for compact fixtures and discreet integration.
MODULAR	Expand the system by combining series of V-BRAINS and daisy chaining fixtures to suit. No tools required , self-addressing quick connectivity. Compact design with multiple mounting channels for the most demanding applications.
HEAT MANAGEMENT	Integral aluminum heatsink, optimally designed for passive cooling.

SACO

V-BRAIN 600 WET

FEATURES GUIDE

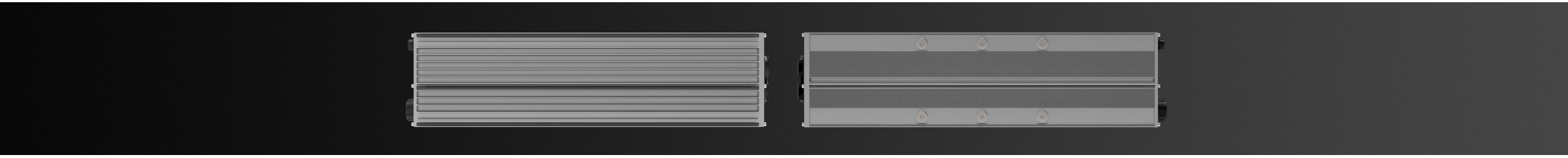

PHYSICAL

CONSTRUCTION	Extruded 6063-T5 aluminum housing (0.118”/3mm) Machined high-grade 6061-T6 aluminum endcaps (0.125”/3mm) Stainless steel hardware
MOUNTING	Die-formed laser cut cold rolled steel mounting brackets (0.125”/3mm) Extruded channels allow variety of mounting options
SURFACE FINISH	Durable polyester powder coated endcaps Black anodized aluminum housing
WEIGHT	7.2lbs (3.3kg) (mounting brackets not included)

THERMAL

OPERATING TEMP	-40°F to 122°F (-40°C to 50°C)
HEAT CONTROL	Use of entire housing surface area for ideal passive convection cooling

ELECTRICAL

INPUT VOLTAGE	Various mains voltage options available 100-240VAC Typical (50/60Hz) 180-305VAC (50/60Hz)
OUTPUT VOLTAGE	2 x 48VDC Typical
OUTPUT CURRENT	4.9A Maximum per output
OUTPUT POWER	250W Maximum per output

CONNECTORS

POWER INPUT	Panelmount IP65 (when mated), twist-lock, hot disconnect Inlet-outlet combination for daisy-chaining
DATA INPUT	Standard RJ45 receptacle, IP65 (when mated)
FIXTURE OUTPUT	2 x 6-Conductor, IP65 (when mated), over-molded quick-connect connectors Refer to basic wiring guide for general lead cables to daisy chain ratios Consult SACO for optimal system configuration on your project)
DATA OUTPUT	Standard RJ45 receptacle IP65 (when mated), for serial V-BRAIN data connections

SHOCKWAVE ACCESSORIES

VIDEO	Multiple Shockwave video processing options are available
PROCESSORS	See accessories guide for options

ADDITIONNAL INFORMATION

CERTIFICATION	IP65 (as per IEC 60529-1:2013, when receptacles are capped or mated) NRTL (as per UL 62368-1:2014, CAN/CSA-C22 No. 62368-1:2014) CE (as per EN 62368-1:2014/A11 :2017)
WARRANTY	5 years
ORIGIN	Designed and made in North America

SHOCKWAVE VIDEO LIGHTING

Copyright © 2018 by SACO. All Rights Reserved. Shockwave® is a registered trademark of SACO. All specifications subject to change without notice. Information furnished by SACO is believed to be accurate and reliable. However, no responsibility or liability by SACO for its use, nor for infringement of patents or other rights of third parties which may result from its use. No license is granted by implication or otherwise under any patent or other rights by SACO.

V2.3-2020-10

V-BRAIN 600 WET

SPECIFICATIONS GUIDE

BLACK MATTE ANODIZED VERSION SHOWN

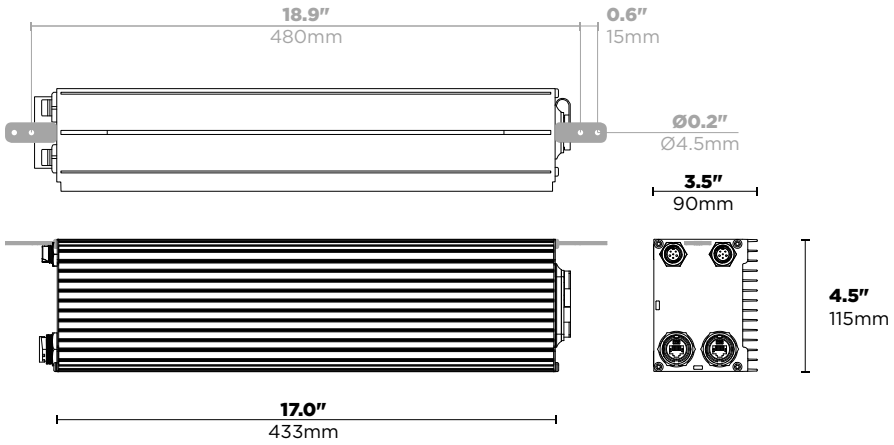

(MOUNTING DIMENSIONS IN GREY.
SEE ACCESSORIES FOR MOUNTING BRACKET OPTIONS)

PRODUCT ORDERING CODE SVB600--------

SVB600 **MODEL #**

NOMINAL POWER

600 600 Watts [1]

[1] Maximum nominal distribution of power to all outputs. Actual maximum power will depend on the length of each lead cable. Refer to basic wiring guide for general lead cables to daisy chain ratios, and consult SACO for optimal system configuration of your project.

ENVIRONMENT COMPABILITY

W Wet/Outdoor

MAINS VOLTAGE

U Universal (90-264VAC)
3 250-308VAC [2]

[2] Has pigtailed ends as standard. Consult SACO for power plugs.

POWER INPUT CABLE RECEPTACLES

2QT 2 x Quick connectors (Twist lock, hot disconnect, panel mount IP65) [3]
1G 1 x Cable gland (IP69 strain relief)

[3] Inlet-outlet dual connector combination for easy power daisy-chaining. Individual rubber sealing covers protects receptacle when not in use; sealed to IP65 level when mated. Not suitable for Mains Voltage option 3.

POWER INPUT CABLE HARNESS LENGTH

301.2 3-conductor 18AWG, 4' (1.2m) [4,5,6]
3__._ 3-conductor 18AWG, custom length [7]

[4] 18AWG cable is default option. Consult SACO for options.
[5] Default length option, has pigtailed end as standard. Consult SACO for power plugs.
[6] For daisy chaining power between V-BRAINS with 2QT receptacles, please consult factory or see accessories for details.
[7] Maximum 3-conductor cable length depends on system installation. Consult SACO for special lengths.

DATA CABLE RECEPTACLES

2QRJ 2 x Quick connectors (Bayonet lock, RJ45 panel mount) [8]

[8] Twin receptacles for easy data daisy-chaining. Use with corresponding field installable plug cap, or water and dust cap when not in use. See accessories for details.

FIXTURE CABLE RECEPTACLES

2QP6 2 x Quick connectors (Push-lock, 6 pins, panel mount) [9]

[9] Make sure connector choice corresponds with that of light fixtures. Use water and dust caps when not in use. See accessories for details.

HOUSING FINISH

BMA Black Matte Anodized
CMA Clear Matte Anodized
_ _ Custom, please specify [10]

[10] The housing being the product's heatsink, any custom finish other than the default ones will have to be evaluated by SACO before acceptance, as it might lower performance.

SHOCKWAVE VIDEO LIGHTING

Copyright © 2018 by SACO. All Rights Reserved. Shockwave® is a registered trademark of SACO. All specifications subject to change without notice. Information furnished by SACO is believed to be accurate and reliable. However, no responsibility or liability by SACO for its use, nor for infringement of patents or other rights of third parties which may result from its use. No license is granted by implication or otherwise under any patent or other rights by SACO.

V2.3-2020-10

V-BRAIN 600 WET

WIRING GUIDE - V-STICK S

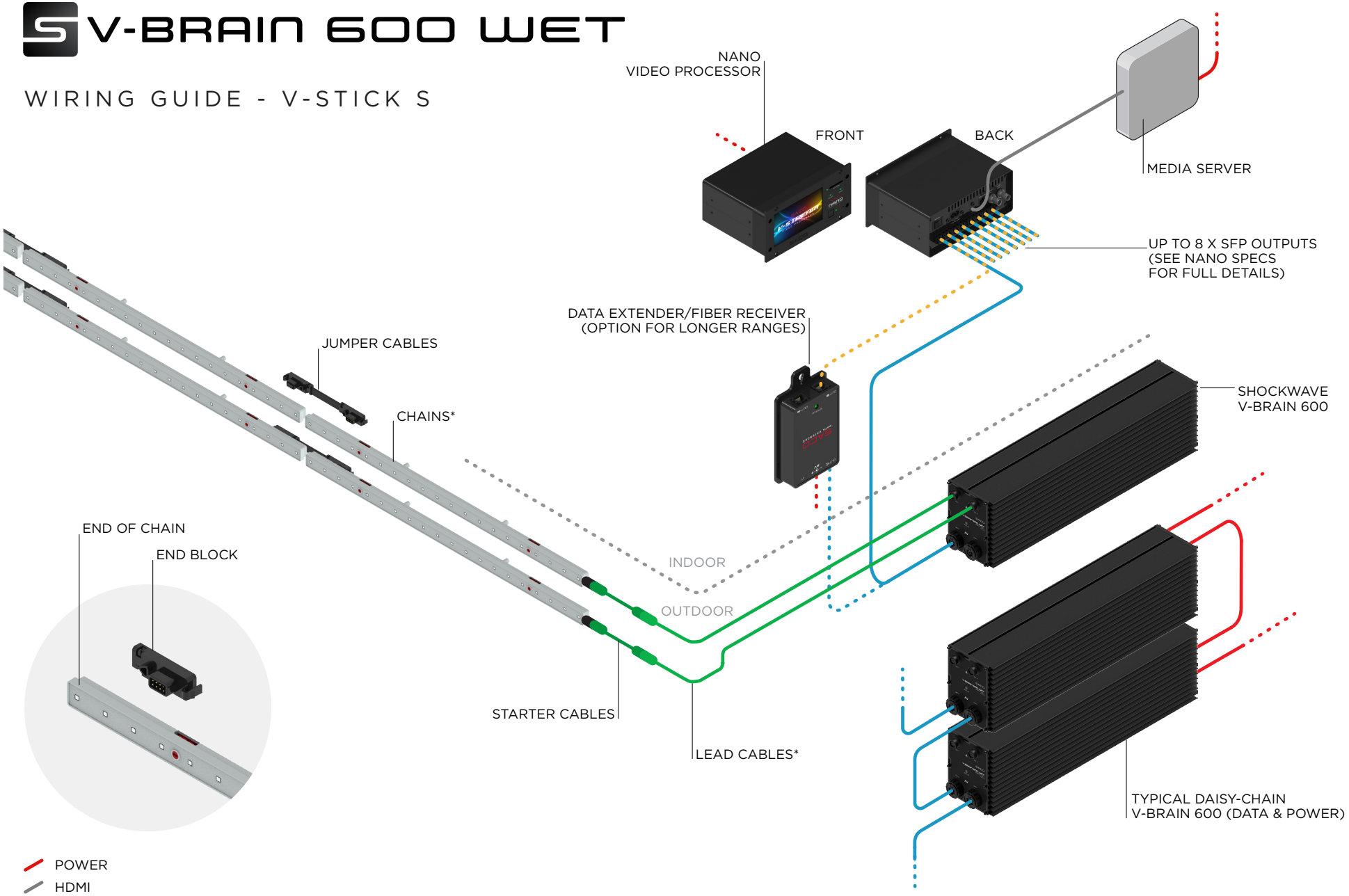

POWER	
HDMI	
CAT6	Theoretical Max CAT6 or better instead. Cable length is 328 ft (100 m) in ideal installation conditions, for video data speeds.
MULTI-MODE OPTIC FIBRE	Multi-mode duplex optic fibre for fast reliable transfer over long distances.
FIXTURE CABLE	*Max lead cable length to V-Brain is 425 ft (130 m) for chains up to 31 ft (9.6 m). Fixture chains up to 41 ft (12.8 m) possible for lead cables up to 328 ft (100 m).

SHOCKWAVE VIDEO LIGHTING

Copyright © 2018 by SACO. All Rights Reserved. Shockwave® is a registered trademark of SACO. All specifications subject to change without notice. Information furnished by SACO is believed to be accurate and reliable. However, no responsibility or liability by SACO for its use, nor for infringement of patents or other rights of third parties which may result from its use. No license is granted by implication or otherwise under any patent or other rights by SACO.

V2.3-2020-10

V-BRAIN 600 WET

WIRING GUIDE - V-STICK S2

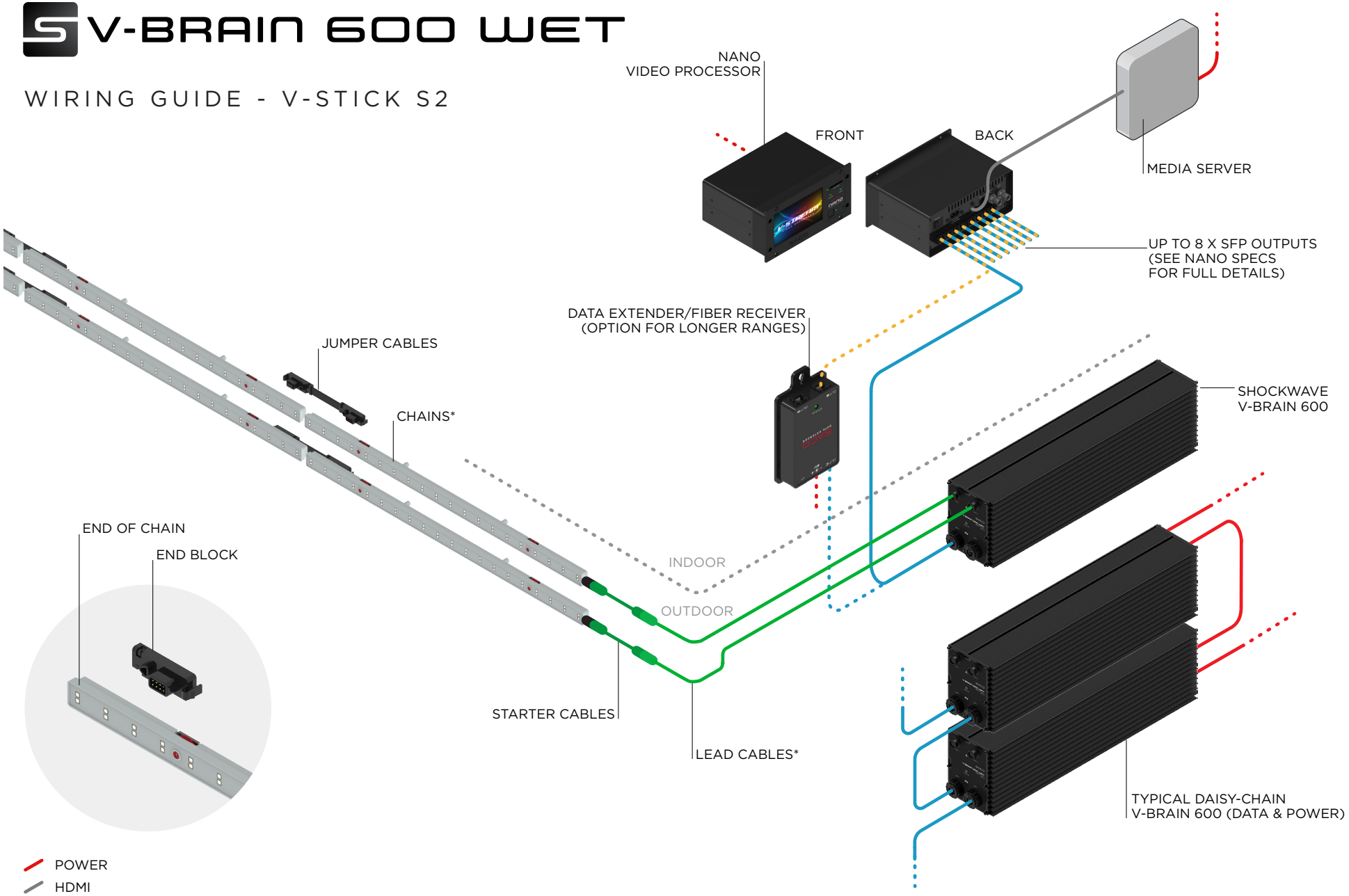

POWER	
HDMI	
CAT6	Theoretical Max CAT6 or better instead. Cable length is 328ft (100m) in ideal installation conditions, for video data speeds.
MULTI-MODE OPTIC FIBRE	Multi-mode duplex optic fibre for fast reliable transfer over long distances.
FIXTURE CABLE	*Max lead cable length to V-Brain is 212ft (65m) for chains up to 15ft (4.8m). Fixture chains up to 20ft (6.4m) possible for lead cables up to 164ft (50m).

SHOCKWAVE VIDEO LIGHTING

Copyright © 2018 by SACO. All Rights Reserved. Shockwave® is a registered trademark of SACO. All specifications subject to change without notice. Information furnished by SACO is believed to be accurate and reliable. However, no responsibility or liability by SACO for its use, nor for infringement of patents or other rights of third parties which may result from its use. No license is granted by implication or otherwise under any patent or other rights by SACO.

V2.3-2020-10